科目：工程力學　適用：土木系三

編號： 822

考生注意：
1.依次序作答，只要標明題號，不必抄題。
2.答案必須寫在答案卷上，否則不予計分。
3.限用藍、黑色筆作答；試題須隨卷繳回。

(1) For the cross section as shown below, determine:

(a) the distance $\bar{y}$ which locates the centroidal axis x' for the cross-sectional area, [10%]

(b) the moment of inertia $I_{x'}$ about the x' centroidal axis. [10%]

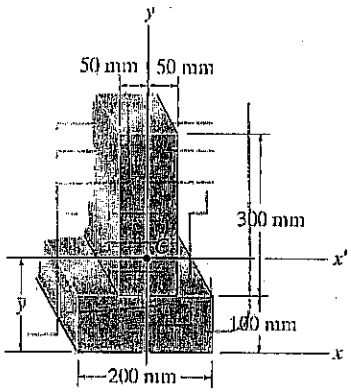

(2) Determine the shear force and moment in the beam at points C and D. Point D is just to the right of the 5-kip load. [20%]

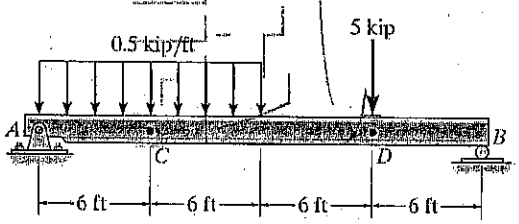

(3) Draw the shear and moment diagrams for the overhang beam. [20%]

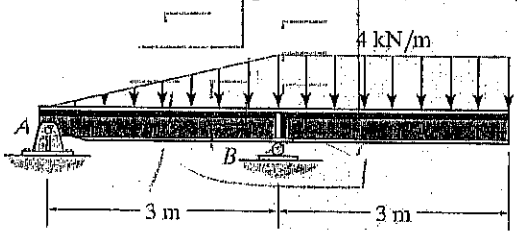

(4) Determine the horizontal and vertical components of reaction that pins A and C exert on the two-member arch. [20%]

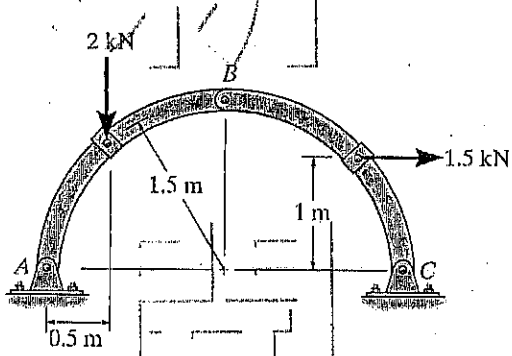
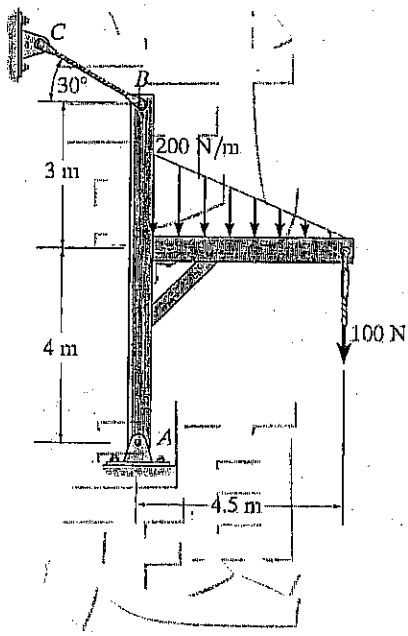
(5) Determine the horizontal and vertical components of reaction at the pin A and the force in the cable BC. Neglect the thickness of the member [20%]